M12 -ruuvien kiristymomentti: /
Tightening torque of the
M12 screws: 115 Nm.

Iskutilavuus Stroke volume	22,7 dm^3
Max paine Max pressure	28 MPa 280 bar
Max kuorma Max load	250 kN 25 ton
Max syl. kulma Max cyl. angle	32°

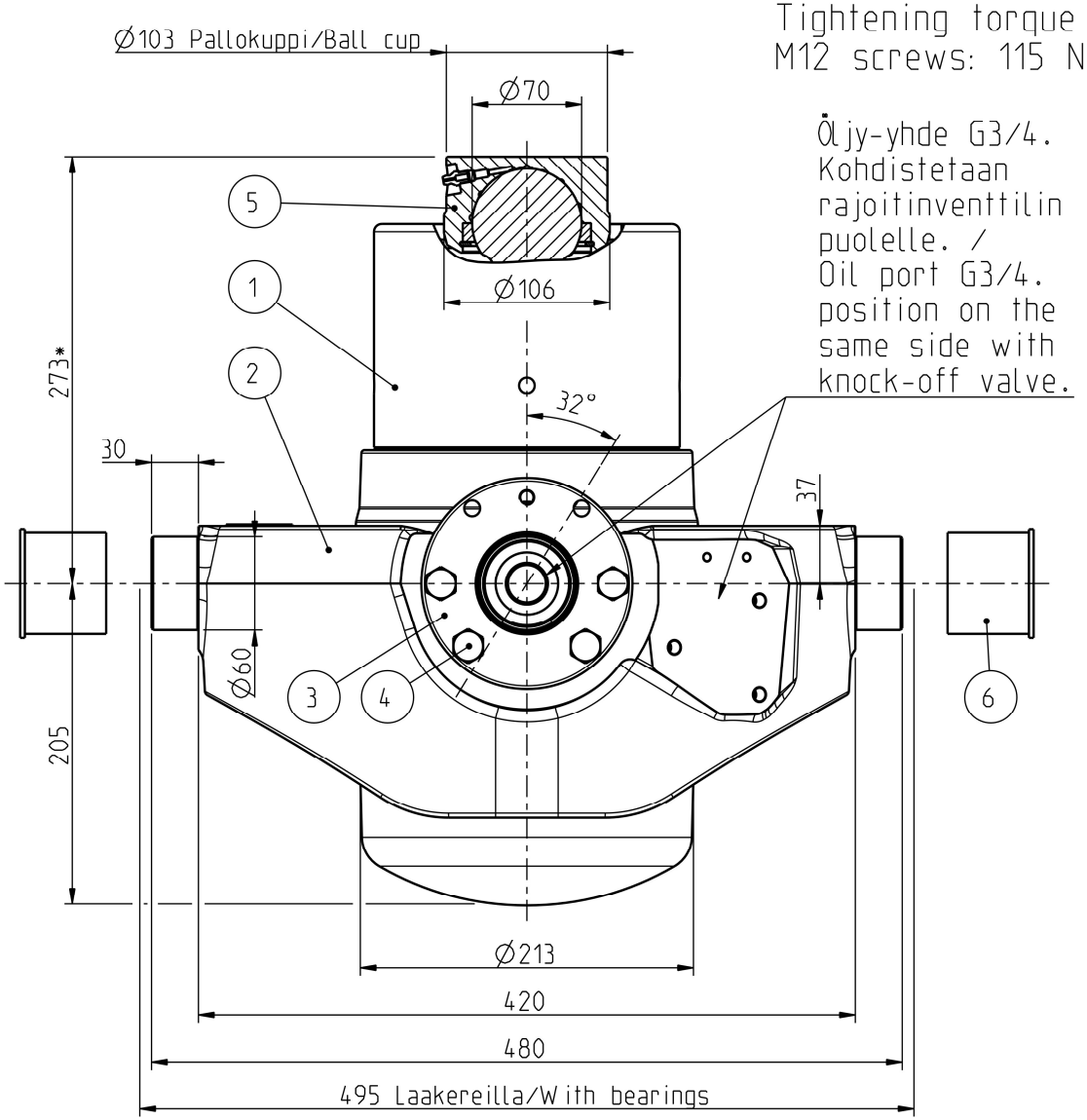

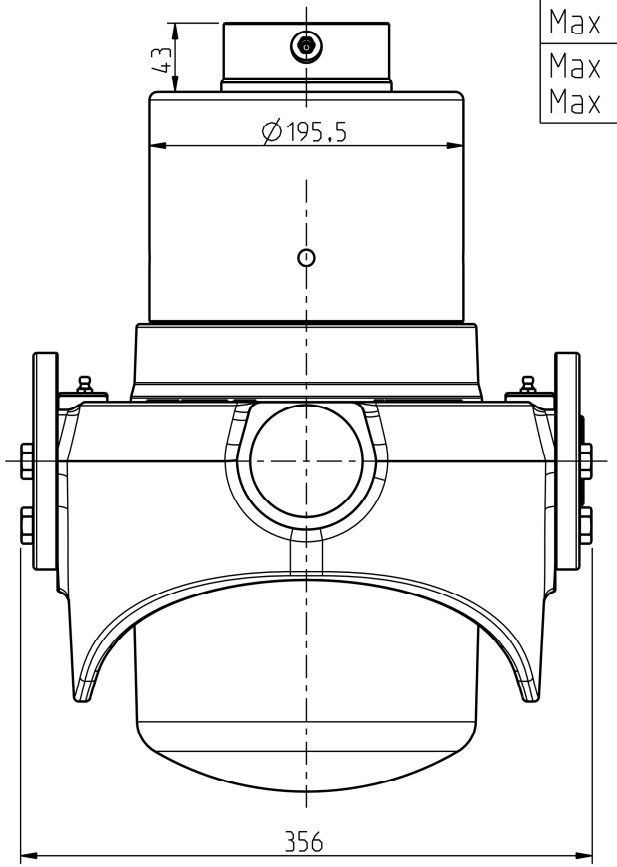

Ø Vaihe Ø Stage	Isku/ Stroke mm
172	295
152	298
132	300
115	286
100	238
85	256
Yht/Total	1673

* +Asennusvara / Mounting space min 15 mm.

POS.	QTY	PRODUCT CODE	NAME	NOTE
6	2	CWT045129122	PROTECTION CAP 60	-
5	1	320209515	BALL CUP 70 SUT, SDC M8x1 106	-
4	8	350510431	HEX SCREW M12x40 -10.9 DELTA	SCREW KIT: 350511339
3	2	320210049	BEARING CRADLE SUT LL	-
2	1	320210050	CYLINDER CRADLE SUT 194-172 LL	-
1	1	310209363	TELC 172-6-1673 SUT 27 HP	-

Date	Drawn	Revision		
		Piirt Drawn VVa	GENERAL TOLERANCE: ISO 2768-m	Aihio Preform -
	Ra µm	Pvm Date 02.05.24	THREAD TOLERANCE : ISO 965-3/ISO 228-1	Paino (kg) Weight 119.306
		Koko Size A3	WELD ACCORDING TO: ISO 5817	Mat STD -
		Liittyy / Belongs to: SUT 27 LL		Material -
		Nimitys: NY SUT 27 LL 172-6-1673		Suhde/Scale 3:10 / Revision -
		Name: LU SUT 27 LL 172-6-1673		Piirustus no / Drawing no 310210664

wipro

WIPRO INFRASTRUCTURE ENGINEERING OY PL 9 25501 Perniö Finland