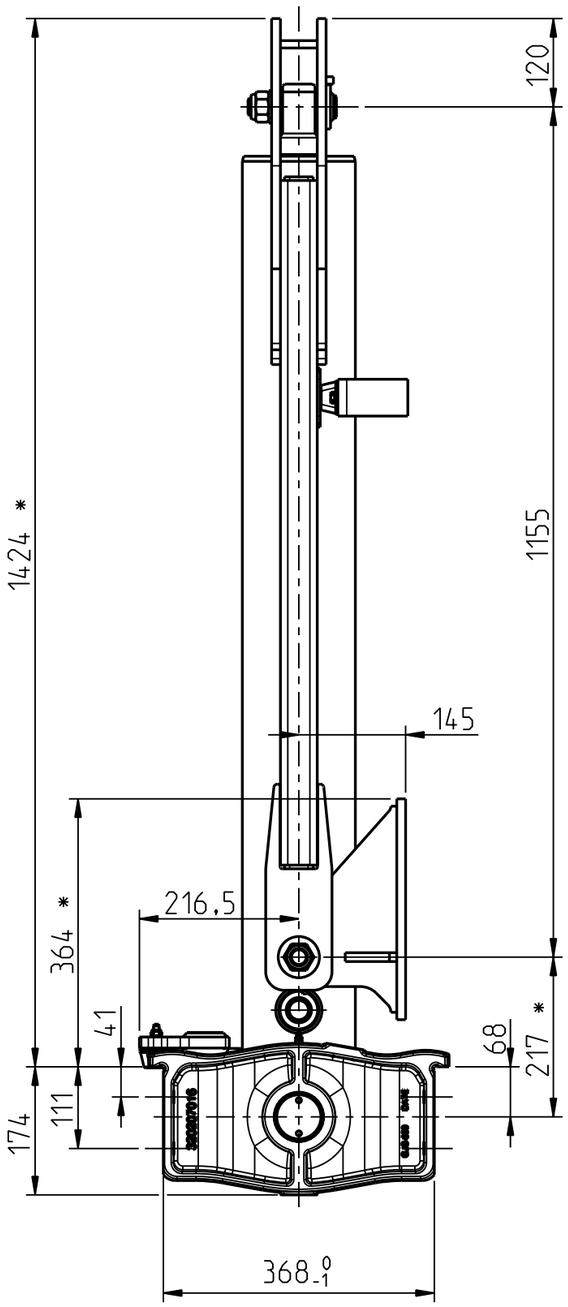

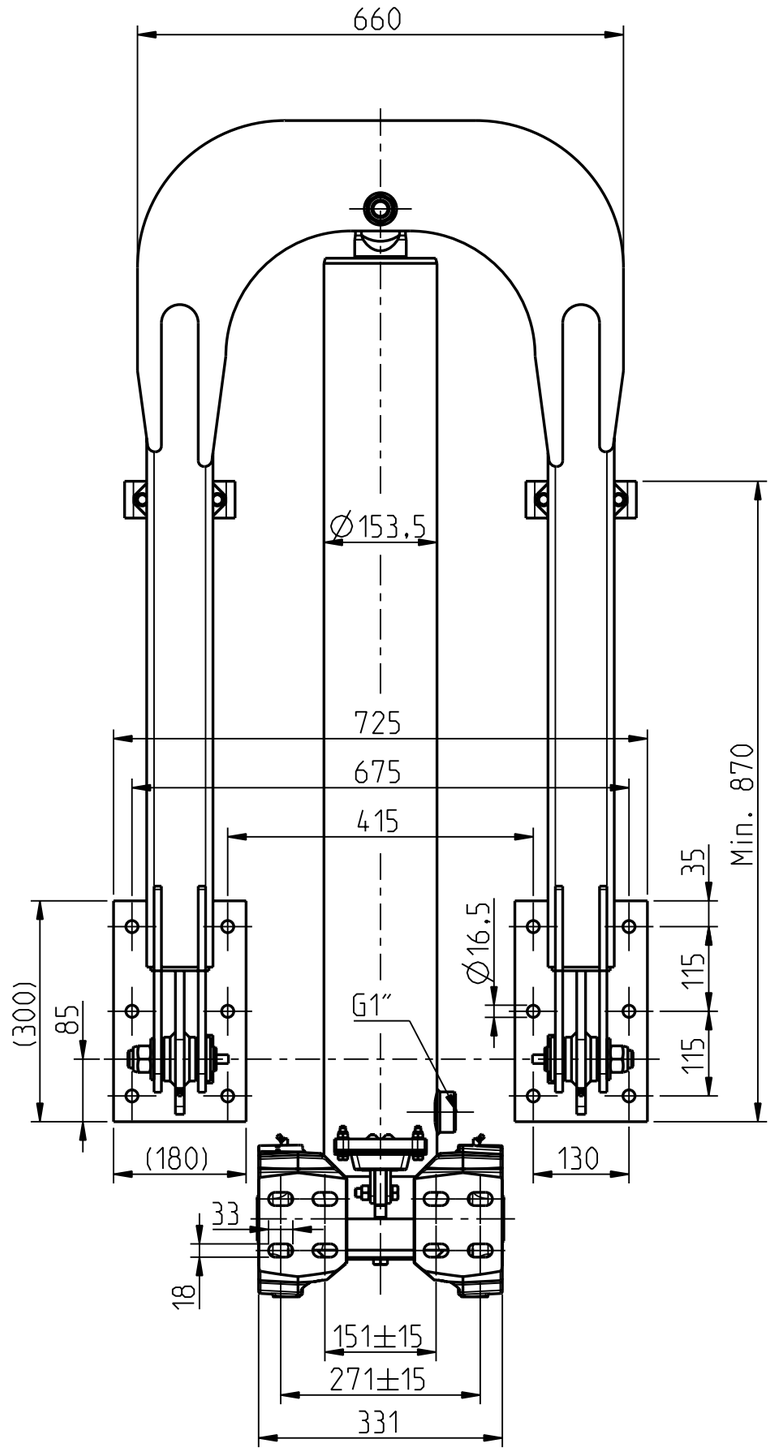

Vaihe/Stage	Isku/Stroke
Ø132	1120
Ø115	1110
Ø100	1106
Ø85	1111
Ø70	1100
TOTAL	5547

Suurin sylinterin
kippauskulma 32°/
Max cylinder tipping angle 32°

* Asennusvara/
Mounting space
+20...60 mm.

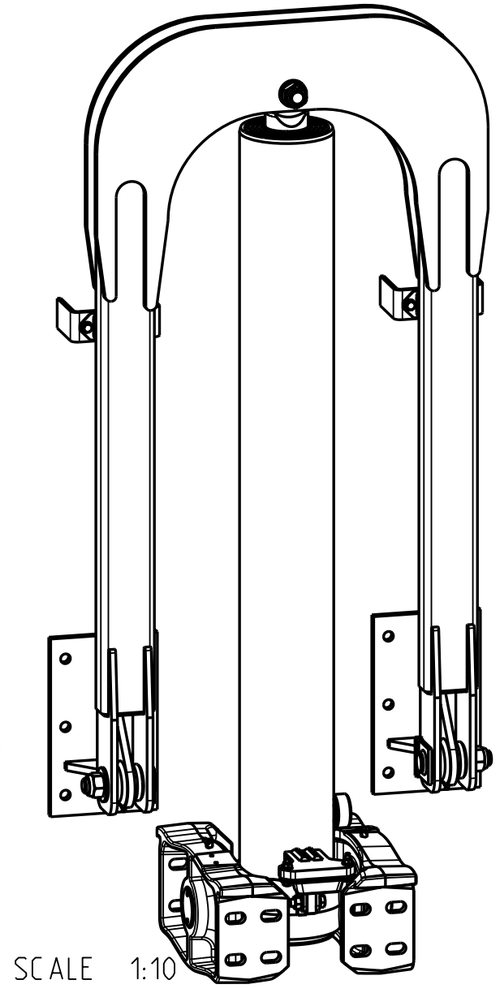

Max kuorma /load: 32t
Max paine /pressure: 170 bar (17 MPa)
Iskutilavuus / stroke vol: 46,1 dm³.

Date	Drawn	Revision		
		Piirt / Drawn: TDa	GENERAL TOLERANCE: ISO 2768-m	Koodi / Code: -
	Ra µm	Pvm / Date: 12.11.15	THREAD TOLERANCE: ISO 965-3/ISO 228-1	Paino (kg) / Weight: 257.331
		Koko / Size: A3	WELD ACCORDING TO: ISO 5817	Material STD -
		Liittyy / Belongs to: JTD		Material: -
		Nimitys: NY 153/ 70x5547		Suhde/Scale: 3:25 / Revision: -
		Name: LIFTUN 153/ 70x5547		Piirustus no / Drawing no: 310208752

WIPRO Applying Thought

WIPRO INFRASTRUCTURE ENGINEERING OY PL 9 25501 Pernio Finland