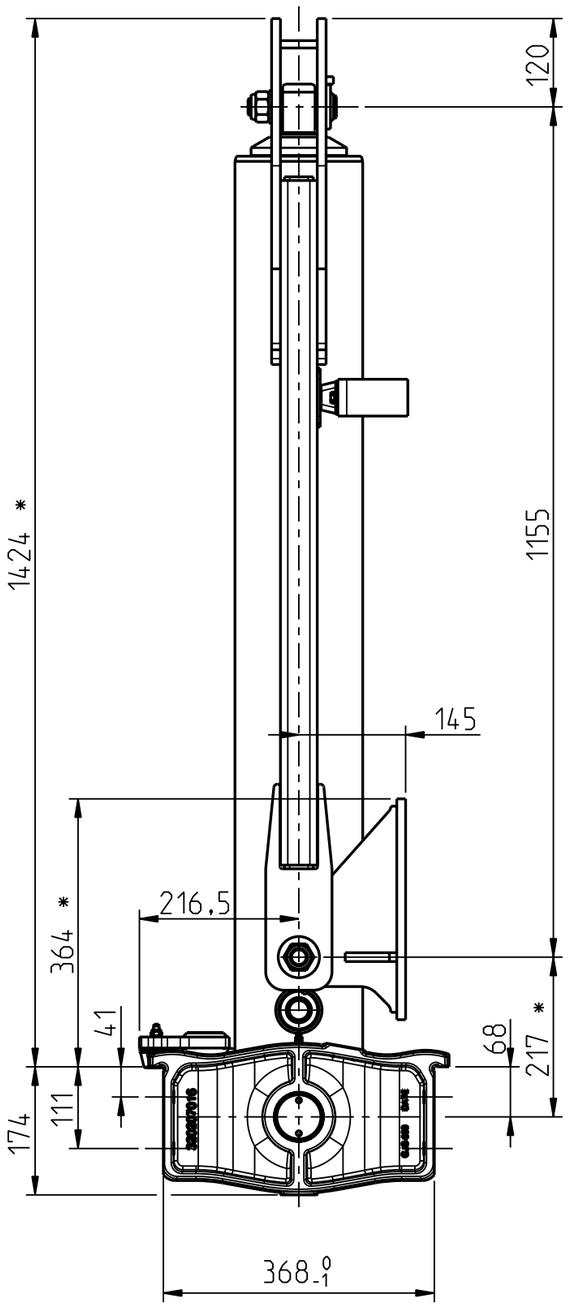

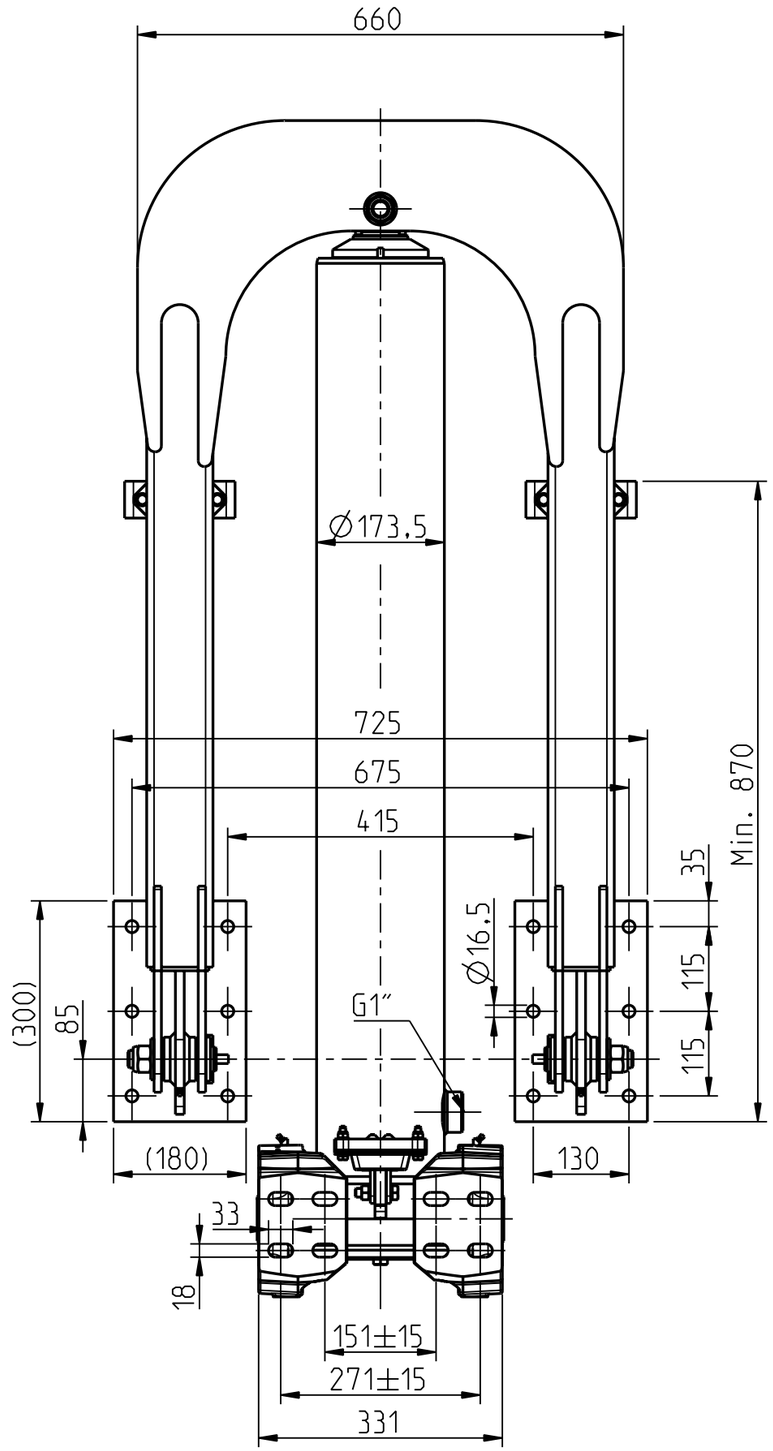

Vaihe/Stage	Isku/Stroke
Ø152	1110
Ø132	1120
Ø115	1110
Ø100	1106
Ø85	1100
TOTAL	5546

Suurin sylinterin
kippauskulma 32°/
Max cylinder tipping angle 32°

* Asennusvara/
Mounting space
+20...60 mm.

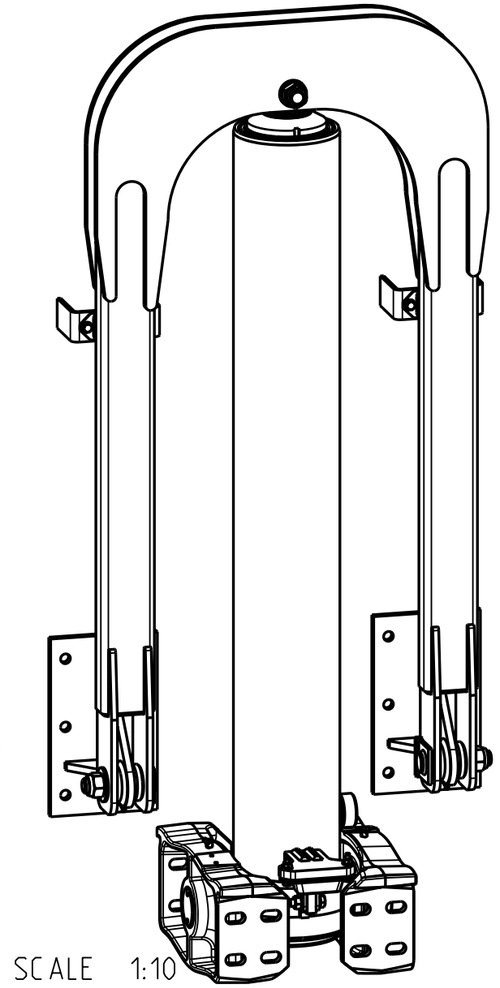

Max kuorma /load: 40t
Max paine /pressure: 170 bar (17 MPa)
Iskutilavuus / stroke vol: 61,9 dm³.

Date	Drawn	Revision		
		Piirt / Drawn TDa	GENERAL TOLERANCE: ISO 2768-m	Koodi / Code -
	Ra µm	Pvm / Date 12.11.15	THREAD TOLERANCE : ISO 965-3/ISO 228-1	Paino (kg) / Weight 297.966
		Koko / Size A3	WELD ACCORDING TO: ISO 5817	Material STD -
		Liittyy / Belongs to: JTD		Material: -
		Nimitys: NY 173/ 85x5546		Suhde/Scale 3:25 / Revision -
		Name: LIFTUN 173/ 85x5546		Piirustus no / Drawing no 310208754

WIPRO Applying Thought

WIPRO INFRASTRUCTURE ENGINEERING OY PL 9 25501 Perniö Finland