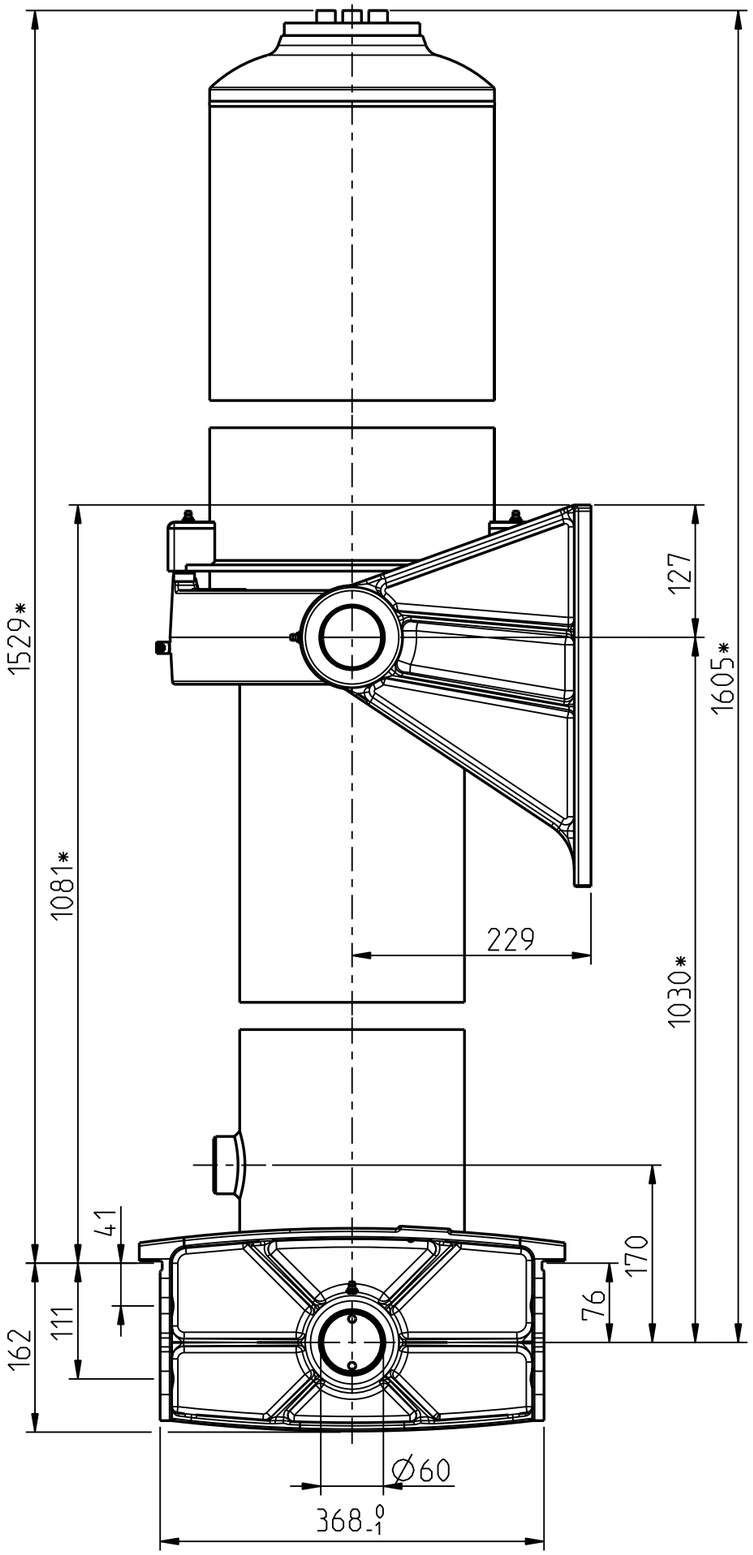

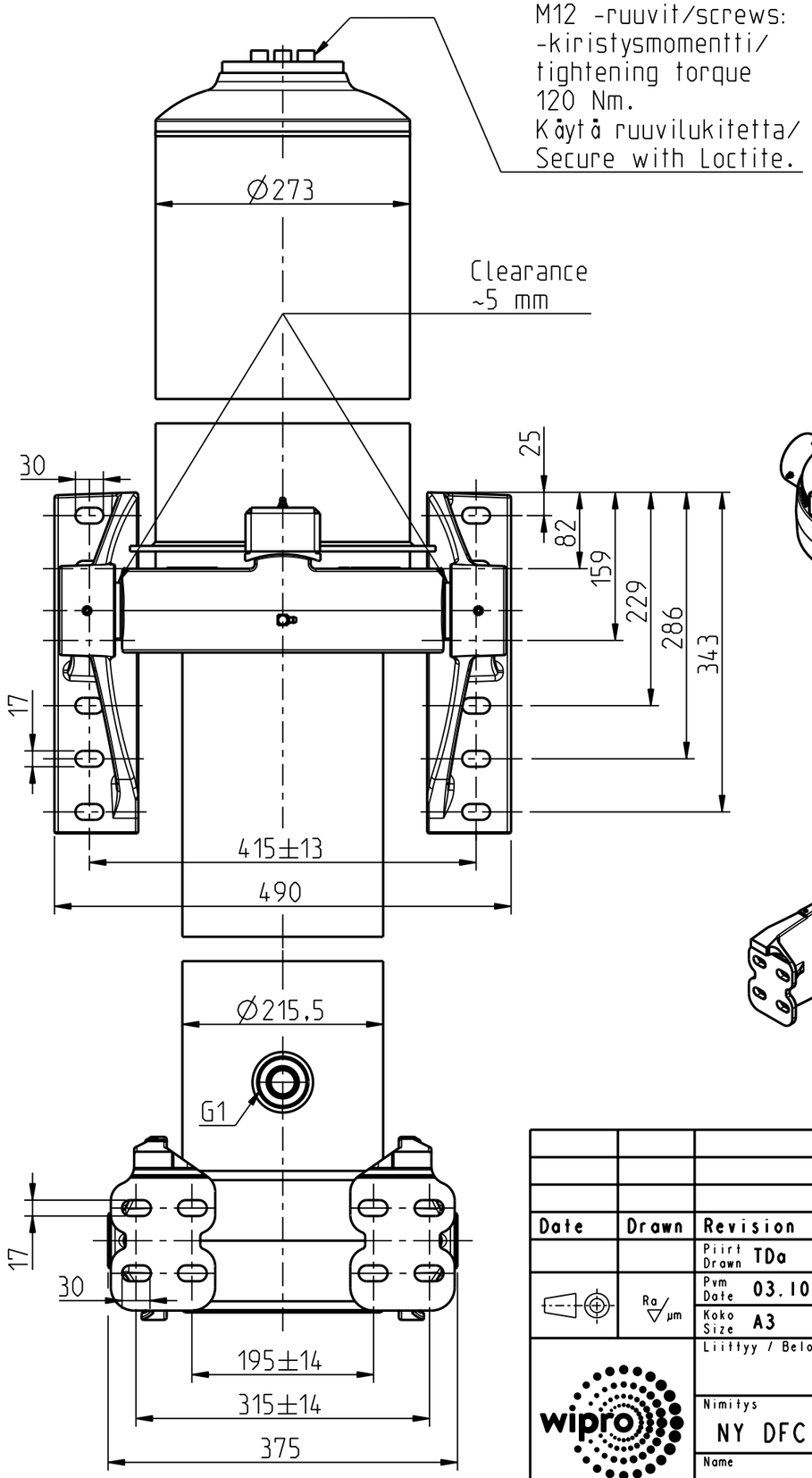

Iskutilavuus Stroke volume	126,5 dm^3
Max paine Max pressure	17 MPa 170 bar
Max sylinterikuorma Max cylinder thrust	250 kN 25 ton
Max kippauskuorma Max tipping load	500 kN 50 ton
Max syl kallistuskulma Max cyl tilting angle	32°

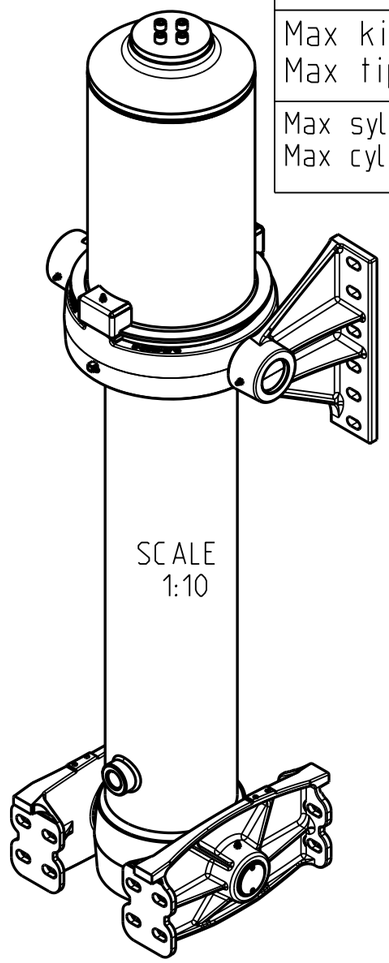

Ø vaihe Ø stage	Isku Stroke
191	1287
169	1297
149	1299
129	1301
110	1302
91	1302
Total	7788

* Min 20 mm pull out needs to be added!

Date	Drawn	Revision			
		Piirt Drawn TDa	GENERAL TOLERANCE: ISO 2768-m	Aihio Preform	-
	Ra µm	Pvm Date 03.10.22	THREAD TOLERANCE : ISO 965-3/ISO 228-1	Paino (kg) Weight	420.700
		Koko Size A3	WELD ACCORDING TO: ISO 5817	Mat STD	-
		Liittyy / Belongs to DFC-EFC		Material -	
		Nimitys NY DFC 191-6-7788 130 D5 TB-1030 F		Suhde/Scale 17:100	Revision
		Name LU DFC 191-6-7788 130 D5 TB-1030 F		Piirustus no / Drawing no 310115950	

WIPRO INFRASTRUCTURE ENGINEERING OY PL 9 25501 Pernio Finland