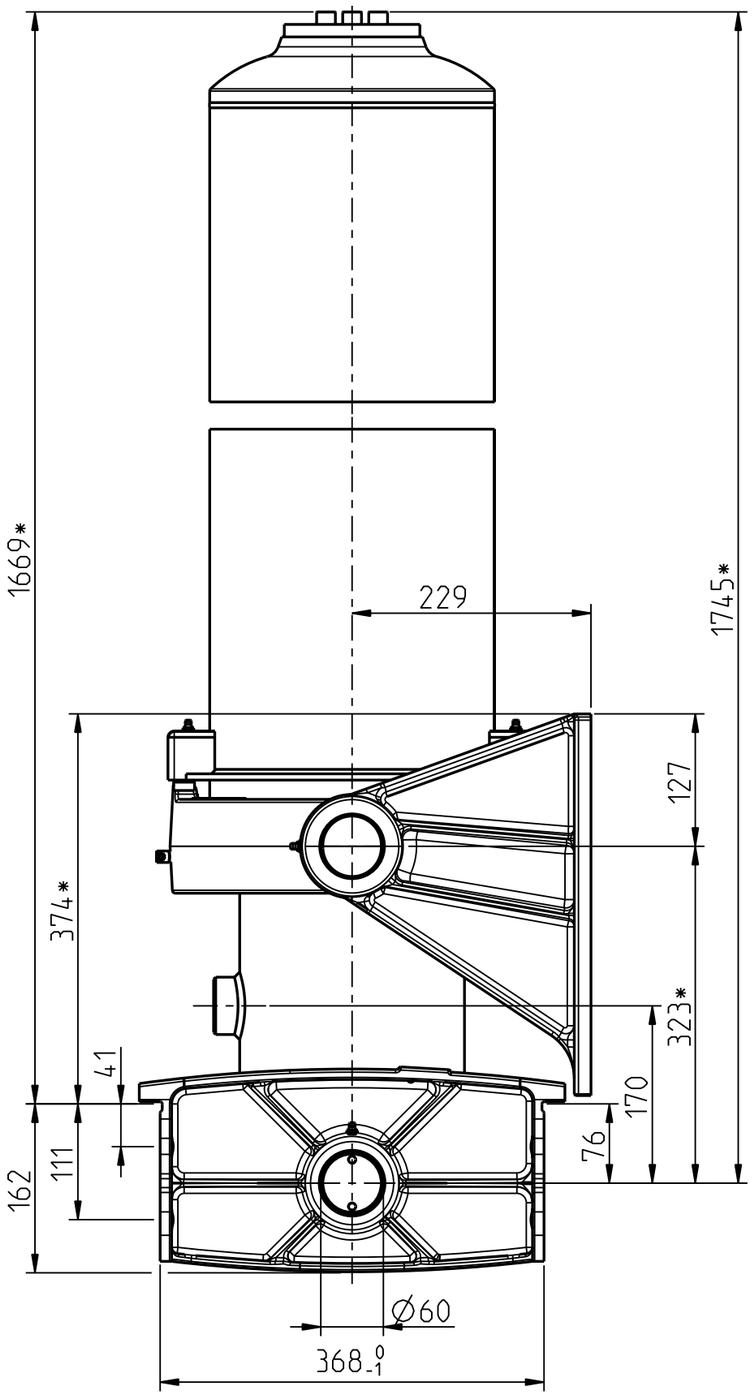

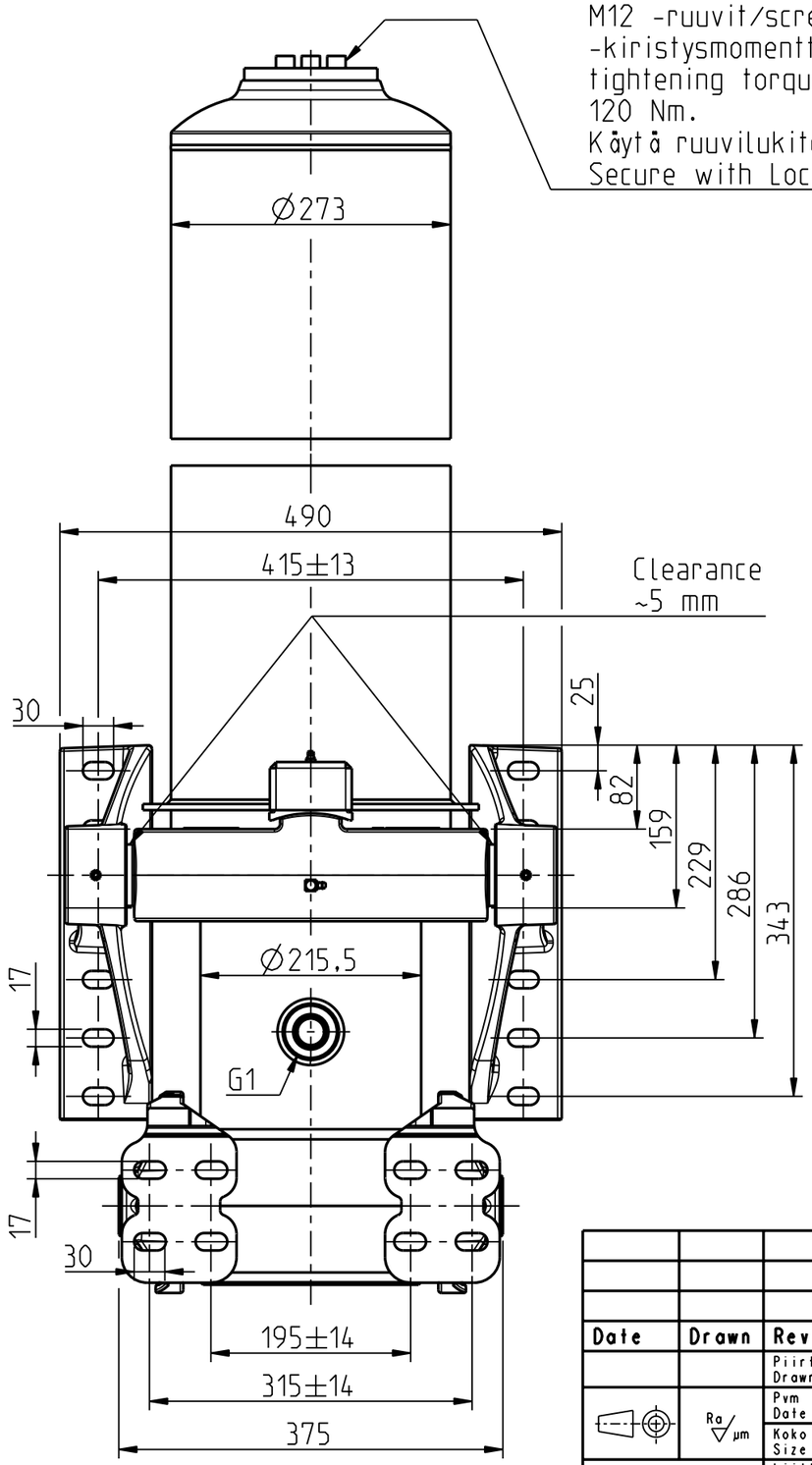

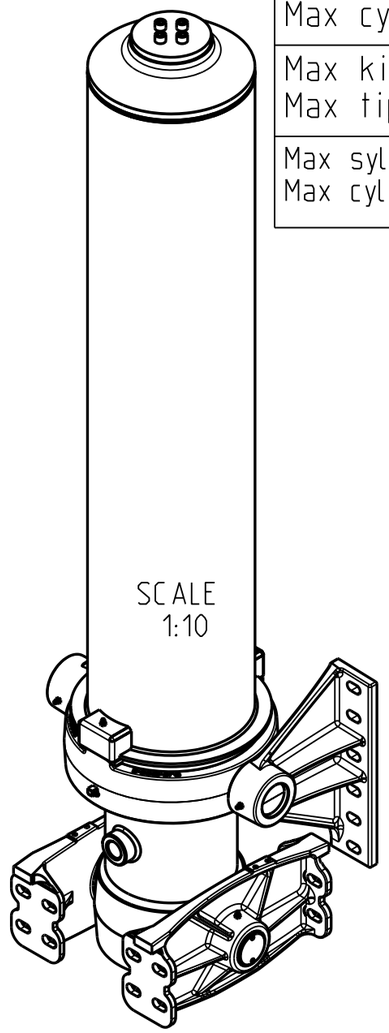

Iskutilavuus Stroke volume	139,2 dm^3
Max paine Max pressure	15 MPa 150 bar
Max sylinterikuorma Max cylinder thrust	250 kN 25 ton
Max kippauskuorma Max tipping load	500 kN 50 ton
Max syl kallistuskulma Max cyl tilting angle	32°

Ø vaihe Ø stage	Isku Stroke
191	1417
169	1427
149	1429
129	1431
110	1432
91	1432
Total	8568

* Min 20 mm pull out needs to be added!

Date	Drawn	Revision			
		Piirt Drawn TDa	GENERAL TOLERANCE: ISO 2768-m	Aihio Preform	-
	Ra µm	Pvm Date 03.10.22	THREAD TOLERANCE : ISO 965-3/ISO 228-1	Paino (kg) Weight	469.466
		Koko Size A3	WELD ACCORDING TO: ISO 5817	Mat STD	-
		Liittyy / Belongs to DFC-EFC		Material -	
		Nimitys NY DFC 191-6-8568 143 D5 F		Suhde/Scale 17:100	Revision
		Name LU DFC 191-6-8568 143 D5 F		Piirustus no / Drawing no 310115946	

WIPRO INFRASTRUCTURE ENGINEERING OY PL 9 25501 Pernio Finland